OM-TA3-1.8-F March 2017

Processes

MIG (GMAW) Welding

Description

Robotic, Air-Cooled, ThruArm™ MIG (GMAW) Welding Gun for FANUC® Robots

TOUGH GUN™ TA3
Robotic Air-Cooled MIG Gun

OWNER'S MANUAL

Tregaskiss
2570 North Talbot Road
Windsor, Ontario N0R 1L0
Canada

Phone: 1-855-MIGWELD (644-9353) (US & Canada)
+1-519-737-3000 (International)
Fax: 519-737-1530
For more information, visit us at Tregaskiss.com

Thank You for Choosing Tregaskiss

Thank you for selecting a Tregaskiss product. The MIG gun you have purchased has been carefully assembled and is ready to weld and factory tested prior to shipment to ensure high performance. Before installing, compare the equipment received against the invoice to verify that the shipment is complete and undamaged. It is the responsibility of the purchaser to file all claims of damage or loss that may have occurred during transit with the carrier.

The owner's manual contains general information, instructions and maintenance to help better maintain your MIG gun. Please read, understand and follow all safety precautions.

While every precaution has been taken to assure the accuracy of this owner's manual, Tregaskiss assumes no responsibility for errors or omissions. Tregaskiss assumes no liability for damages resulting from the use of information contained herein. The information presented in this owner's manual is accurate to the best of our knowledge at the time of printing. Please reference Tregaskiss.com for updated material.

For customer support and special applications, please call the Tregaskiss Customer Service Department at 1-855-MIGWELD (644-9353) (US & Canada) or +1-519-737-3000 (International) or fax 1-519-737-1530. Our trained Customer Service Team is available between 8:00 a.m. and 5:30 p.m. EST, and will answer your product application or repair questions.

Tregaskiss manufactures premium robotic MIG (GMAW) welding guns, peripherals and consumables. For more information on other premium Tregaskiss products, contact your local Tregaskiss distributor or visit us on the web at Tregaskiss.com.

For additional support materials such as spec sheets, troubleshooting information, how-to guides and videos, animations, online configurators and much more, please visit Tregaskiss.com.
Scan this QR Code with your smart phone for immediate access to Tregaskiss.com/TechnicalSupport

TABLE OF CONTENTS

Subject to Change – The information presented in this manual is accurate to the best of our knowledge at the time of printing. Please visit Tregaskiss.com for the most up-to-date information.

DECLARATION OF CONFORMITY

for European Community (CE marked) products.

Tregaskiss, 2570 North Talbot Rd., Oldcastle, Ontario N0R 1L0 Canada declares that the product(s) identified in this declaration conform to the essential requirements and provisions of the stated Council Directive(s) and Standard(s).

Product/Apparatus Identification:

Product	Stock Number
Tregaskiss TOUGH GUN TA3 Series	TA1XXXXXXXXX (Configurable #)

Council Directives:

- 2006/95/EC Low Voltage
- 2011/65/EU Restriction of the use of certain hazardous substances in electrical and electronic equipment

Standards:

- IEC 60974-7:2013 Arc welding equipment – Part 7: Torches

Signatory:

David A. Werba
MANAGER, PRODUCT DESIGN COMPLIANCE

March 22, 2017

Date of Declaration

1-1 Fume and Gas Hazards

FUMES AND GASES can be hazardous

Welding and cutting produces fumes and gases. Breathing these fumes and gases can be hazardous to your health.

- Keep your head out of the fumes. Do not breathe the fumes.
- If inside, ventilate the area and/or use local forced ventilation at the arc to remove welding and cutting fumes and gases. The recommended way to determine adequate ventilation is to sample for the composition and quantity of fumes and gases to which personnel are exposed.
- If ventilation is poor, wear an approved air-supplied respirator.
- Read and understand the Safety Data Sheets (SDSs) and the manufacturer's instructions for adhesives, coatings, cleaners, consumables, coolants, degreasers, fluxes and metals.
- Work in a confined space only if it is well ventilated, or while wearing an air-supplied respirator. Always have a trained watch-person nearby. Welding and cutting fumes and gases can displace air and lower the oxygen level causing injury or death. Be sure the breathing air is safe.
- Do not weld or cut in locations near degreasing, cleaning, or spraying operations. The heat and rays of the arc can react with vapors to form highly toxic and irritating gases.
- Do not weld or cut on coated metals, such as galvanized, lead, or cadmium plated steel, unless the coating is removed from the weld area, the area is well ventilated, and while wearing an air-supplied respirator. The coatings and any metals containing these elements can give off toxic fumes if welded.

1-2 Arc Rays and Welding Hazards

ARC RAYS can burn eyes and skin

Arc rays from welding and cutting processes produce intense visible and invisible (ultraviolet and infrared) rays that can burn eyes and skin. Sparks fly off from the weld.

- Wear an approved welding helmet fitted with a proper shade of filter lenses to protect your face and eyes from arc rays and sparks when welding, cutting, or watching (see ANSIZ49.1 and Z87.1 listed in Safety Standards).
- Wear approved safety glasses with side shields under your helmet.
- Use protective screens or barriers to protect others from flash, glare and sparks; warn others not to watch the arc.
- Wear body protection made from durable, flame resistant material (leather, heavy cotton, wool). Body protection includes oil-free clothing such as leather gloves, heavy shirt, cuffless trousers, high shoes and a cap.

WELDING AND CUTTING can cause fire or explosion

Welding or cutting on closed containers such as tanks, drums or pipes, can cause them to blow up. Sparks can fly off from the welding or cutting arc. The flying sparks, hot work piece and hot equipment can cause fires and burns. Accidental contact of electrode to metal objects can cause sparks, explosion, overheating or fire. Check and be sure the area is safe before doing any welding or cutting.

- Remove all flammables within 35 ft. (10.7 m) of the welding or cutting arc. If this is not possible, tightly cover them with approved covers.
- Do not weld or cut where flying sparks can strike flammable material.
- Protect yourself and others from flying sparks and hot metal.
- Be alert that welding sparks and hot materials from welding and cutting can easily go through small cracks and openings to adjacent areas.
- Watch for fire, and keep a fire extinguisher nearby.
- Be aware that welding or cutting on a ceiling, floor, bulkhead or partition can cause fire on the hidden side.
- Do not weld or cut on containers that have held combustibles, or on closed containers such as tanks, drums, or pipes unless they are properly prepared according to AWS F4.1 and AWS A6.0 (see Safety Standards).
- Do not weld or cut where the atmosphere may contain flammable dust, gas, or liquid vapors (such as gasoline).
- Connect work cable to the work as close to the welding or cutting area as practical to prevent welding or cutting current from traveling long, possibly unknown paths and causing electric shock, sparks and fire hazards.
- Do not use welder to thaw frozen pipes.
- Remove stick electrode from holder or cut off welding wire at contact tip when not in use.
- Wear body protection made from durable, flame resistant material (leather, heavy cotton, wool). Body protection includes oil-free clothing such as leather gloves, heavy shirt, cuffless trousers, high shoes and a cap.
- Remove any combustibles, such as a butane lighter or matches, from your person before doing any welding or cutting.
- After completion of work, inspect area to ensure it is free of sparks, glowing embers, and flames.
- Use only correct fuses or circuit breakers. Do not oversize or by-pass them.
- Follow requirements in OSHA 1910.252 (a) (2) (iv) and NFPA 51B for hot work and have a fire watcher and extinguisher nearby.
- Read and understand the Safety Data Sheets (SDSs) and the manufacturer's instructions for adhesives, coatings, cleaners, consumables, coolants, degreasers, fluxes and metals.

ELECTRIC SHOCK can kill

Touching live electrical parts can cause fatal shocks or severe burns. The electrode and work circuit is electrically live whenever the output is on. The input power circuit and machine internal circuits are also live when power is on. In gas metal arc welding (GMAW), the wire, wire reel, drive roll housing and all metal parts touching the welding wire are electrically live. Incorrectly installed or improperly grounded equipment is a hazard.

- Do not touch live electrical parts.
- Wear dry, hole-free insulated gloves and body protection.
- Insulate yourself from work and ground using dry insulating mats or covers big enough to prevent any physical contact with the work or ground.
- Do not use AC output in damp areas, if movement is confined, or if there is danger of falling.
- Use AC output ONLY if required for the welding or cutting process.
- If AC output is required, use remote output control if present on unit.
- Additional safety precautions are required when any of the following electrically hazardous conditions are present: in damp locations or while wearing wet clothing; on metal structures such as floors, gratings or scaffolds; when in cramped positions such as sitting, kneeling or lying; or when there is a high risk of unavoidable or accidental contact with the workpiece or ground. For these conditions, use the following equipment in order presented: 1) a GMAW DC constant voltage (wire) welder, 2) a DC manual (stick) welder or 3) an AC welder with reduced open circuit voltage. In most situations, use of a DC, constant voltage wire welder is recommended. And, do not work alone!
- Disconnect input power or stop engine before installing or servicing equipment. Lockout/tagout input power according to OSHA 29 CFR 1910.147 (see Safety Standards).
- Properly install, ground, and operate this equipment according to its Owner's Manual and national, state/provincial and local codes.
- Always verify the supply ground – check and be sure that input power cord ground wire is properly connected to ground terminal in disconnect box or that cord plug is connected to a properly grounded receptacle outlet.
- When making input connections, attach proper grounding conductor first and double-check connections.
- Keep cords dry, free of oil and greases and protected from hot metal and sparks.
- Frequently inspect power cord for damage or bare wiring. Replace cord immediately if damaged. Bare wiring can kill.
- Turn off all equipment when not in use.
- Do not use worn, damaged, undersized or poorly spliced cables.
- Do not drape cables over your body.
- If earth grounding of the workpiece is required, ground it directly with a separate cable.
- Do not touch electrode if you are in contact with the work, ground or another electrode from a different machine.
- Do not touch electrode holders connected to two welding machines at the same time since double open circuit voltage will be present.
- Use only well-maintained equipment. Repair or replace damaged parts at once. Maintain unit according to manual.
- Wear a safety harness if working above floor level.
- Keep all panels and covers securely in place.
- Clamp work cable with good metal-to-metal contact to workpiece or worktable as near the weld as practical.
- Insulate work clamp when not connected to workpiece to prevent contact with any metal object.
- Do not connect more than one electrode or work cable to any single weld output terminal. Disconnect cable for process when not in use.

CYLINDERS CAN EXPLODE if damaged

Compressed gas cylinders contain gas under high pressure. If damaged, a cylinder can explode. Since gas cylinders are normally part of the welding process, be sure to treat them carefully.

- Protect compressed gas cylinders from excessive heat, mechanical shocks, physical damage, slag, open flames, sparks and arcs.
- Install cylinders in an upright position by securing to a stationary support or cylinder rack to prevent falling or tipping.
- Keep cylinders away from any welding, cutting or other electrical circuits.
- Never drape a welding electrode or cutting torch over a gas cylinder.
- Never allow a welding electrode or cutting torch to touch any cylinder.
- Never weld on a pressurized cylinder – explosion will result.
- Use only the correct compressed gas cylinders, regulators, hoses and fittings designed for the specific application; maintain them and associated parts in good condition.
- Turn face away from valve outlet when opening cylinder valve. Do not stand in front of or behind the regulator
- when opening the valve.
- Keep protective cap in place over valve except when cylinder is in use or connected for use.
- Use the right equipment, correct procedures and sufficient number of persons to lift and move cylinders.
- Read and follow instructions on compressed gas cylinders, associated equipment, and Compressed Gas Association (CGA) publication P-1 listed in Safety Standards.

1-3 Additional Safety Warnings for Installation, Operation and Maintenance

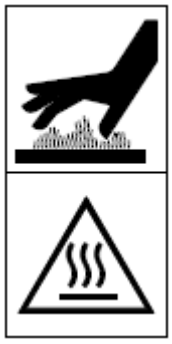

HOT PARTS can burn

- Do not touch hot parts bare handed.
- Allow cooling period before working on equipment.
- To handle hot parts, use proper tools and/ or wear heavy, insulated welding gloves and clothing to prevent burns

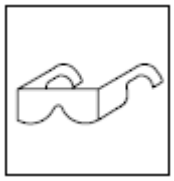

FLYING METAL OR DIRT can injure or kill

- Welding, cutting, chipping, wire brushing and grinding cause sparks and flying metal. As welds cool, they can throw off slag.
- Wear approved safety glasses with side shields even under your welding helmet.

BUILDUP OF GAS can injure or kill

- Shut off compressed gas supply when not in use.
- Always ventilate confined spaces or use approved air-supplied respirator.

ELECTRIC AND MAGNETIC FIELDS (EMF) can affect implanted Medical Devices

- Wearers of Pacemakers and other
- Implanted Medical Devices should keep away.
- Implanted Medical Device wearers should consult their doctor and the device manufacturer before going near arc welding, spot welding, gouging, plasma arc cutting or induction.

NOISE can damage hearing

- Noise from some processes or equipment can damage hearing.
- Wear approved ear protection if noise level is high.

FIRE OR EXPLOSION hazard

- Do not install or place unit on, over or near combustible surfaces.
- Do not install unit near flammables.
- Do not overload building wiring – be sure power supply system is properly sized, rated and protected to handle this unit.

MOVING PARTS can injure

- Keep away from moving parts such as fans.
- Keep all doors, panels, covers and guards closed and securely in place.
- Have only qualified persons remove doors, panels, covers or guards for maintenance and troubleshooting as necessary.
- Reinstall doors, panels, covers or guards when maintenance is finished and before reconnecting input power.
- Keep away from pinch points such as drive rolls.

FLYING SPARKS can injure

- Wear a face shield to protect eyes and face.
- Shape tungsten electrode only on grinder with proper guards in a safe location wearing proper face, hand and body protection.
- Sparks can cause fires – keep flammables away.

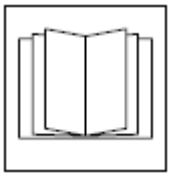

READ INSTRUCTIONS

- Read and follow all labels and the
- Owner's Manual carefully before installing, operating, or servicing the unit. Read the safety information at the beginning of the manual and each section.
- Use only genuine replacement parts from the manufacturer.
- Perform maintenance and service according to the Owner's Manual, industry standards and national, state/provincial and local codes.

WELDING WIRE can injure

- Do not press gun trigger until instructed to do so.
- Do not point gun toward any part of the body, other people or any metal when threading welding wire.

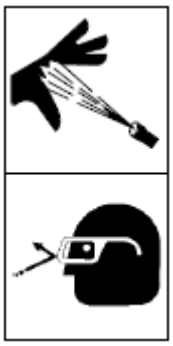

COMPRESSED AIR can injure or kill

- Before working on compressed air system, turn off and lockout/tagout unit, release pressure and be sure air pressure cannot be accidentally applied.
- Relieve air pressure before disconnecting or connecting air lines.
- Check compressed air system components and all connections and hoses for damage, leaks and wear before operating unit.
- Do not direct air stream toward self or others.
- Wear protective equipment such as safety glasses, hearing protection, leather gloves, heavy shirt and trousers, high shoes, and a cap when working on compressed air system.
- Use soapy water or an ultrasonic detector to search for leaks – never use bare hands. Do not use equipment if leaks are found.

TRAPPED AIR PRESSURE AND WHIPPING HOSES can injure

- Release air pressure from tools and system before servicing, adding or changing attachments or opening compressor oil drain or oil fill cap.

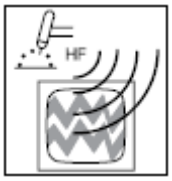

H.F. RADIATION can cause interference

- High-frequency (H.F.) can interfere with radio navigation, safety services, computers and communications equipment.
- Have only qualified persons familiar with electronic equipment perform this installation.
- The user is responsible for having a qualified electrician promptly correct any interference problem resulting from the installation.
- Have the installation regularly checked and maintained.
- If notified by the FCC about interference, stop using the equipment at once.
- Keep high-frequency source doors and panels tightly shut, keep spark gaps at correct setting, and use grounding and shielding to minimize the possibility of interference.

ARC WELDING AND PLASMA CUTTING can cause interference

- Electromagnetic energy can interfere with sensitive electronic equipment such as computers and computer-driven
- equipment such as robots.
- Be sure all equipment in the welding area is electro-magnetically compatible.
- To reduce possible interference, keep cables as short as possible, close together, and down low, such as on the floor.
- Locate welding or cutting operation 100 meters from any sensitive electronic equipment.
- Be sure welding machine or plasma cutter is installed and grounded according to its Owner's Manual.
- If interference still occurs, the user must take extra measures such as moving the welding or cutting machine using shielded cables, using line filters or shielding the work area.

OVERUSE CAN CAUSE OVERHEATING

- Allow cooling period; follow rated duty cycle.
- Reduce current or reduce duty cycle before starting to weld again.
- Do not block or filter air flow to unit.

IMPORTANT: Be sure to follow your facility's lock out / tag out procedures.

1-4 California Proposition 65 Warnings

Welding or cutting equipment produces fumes or gases which contain chemicals known to the State of California to cause birth defects and in some cases, cancer. (California Health & Safety Code Section 25249.5 et seq.)

This product contains chemicals, including lead, known to the State of California to cause cancer, and birth defects or other reproductive harm. *Wash hands after use.*

1-5 EMF Information

Electric current flowing through any conductor causes localized electric and magnetic fields (EMF). The current from arc welding (and allied processes including spot welding, gouging, plasma arc cutting, and induction heating operations) creates an EMF field around the welding circuit. EMF fields may interfere with some medical implants, e.g. Pacemakers. Protective measures for persons wearing medical implants have to be taken. For example, restrict access for passersby or conduct individual risk assessment for welders. All welders should use the following procedures in order to minimize exposure to EMF fields from the welding circuit:

1. Keep cables close together by twisting or taping them, or using a cable cover.
2. Do not place your body between welding cables. Arrange cables to one side and away from the operator.
3. Do not coil or drape cables around your body.
4. Keep head and trunk as far away from the equipment in the welding circuit as possible.
5. Connect work clamp to workpiece as close to the weld as possible.
6. Do not work next to, sit or lean on the welding power source.
7. Do not weld while carrying the welding power source wire feeder.

About Implanted Medical Devices:
Implanted Medical Device wearers should consult their doctor and the device manufacturer before performing or going near arc welding, spot welding, gouging, plasma arc cutting, or induction heating operations. If cleared by your doctor, then following the above procedures is recommended.

1-6 Principal Safety Standards

Safety in Welding, Cutting, and Allied Processes, ANSI Standard Z49.1, is available as a free download from the American Welding Society at www.aws.org or purchased from Global Engineering Documents
(phone: 1-877-413-5184, website: www.global.ihs.com)

Safe Practices for the Preparation of Containers and Piping for Welding and Cutting, American Welding Society Standard AWS F4.1, from Global Engineering Documents
(phone: 1-877-413-5184, website: www.global.ihs.com)

National Electrical Code, NFPA Standard 70, from National Fire Protection Association, Quincy, MA 02269
(phone: 1-800-344-3555, website: www.nfpa.org and www.sparky.org)

Safe Handling of Compressed Gases in Cylinders, CGA Pamphlet P-1, from Compressed Gas Association, 14501 George Carter Way, Suite 103, Chantilly, VA 20151
(phone: 703-788-2700, website: www.cganet.com)

Safety in Welding, Cutting, and Allied Processes, CSA Standard W117.2, from Canadian Standards Association, Standards Sales, 5060 Spectrum Way, Suite 100, Ontario, Canada L4W 5NS
(phone: 1-800-463-6727, website: www.csa-international.org)

Safe Practice For Occupational And Educational Eye And Face Protection, ANSI Standard Z87.1, from American National Standards Institute, 25 West 43rd Street, New York, NY 10036
(phone: 212-642-4900, website: www.ansi.org)

Standard for Fire Prevention During Welding, Cutting, and Other Hot Work, NFPA Standard 51B, from National Fire Protection Association, Quincy, MA 02269
(phone: 1-800-344-3555, website: www.nfpa.org)

OSHA, Occupational Safety and Health Standards for General Industry, Title 29, Code of Federal Regulations (CFR), Part 1910, Subpart Q, and Part 1926, Subpart J, from U.S. Government Printing Office, Superintendent of Documents, P.O. Box 371954, Pittsburg, PA 15250-7954 (phone: 1-866-512-1800)
(there are 10 OSHA Regional Offices – phone for Region 5, Chicago, is 312-353-2220, website: www.osha.gov)

Applications Manual for the Revised NIOSH Lifting Equation, The National Institute for Occupational Safety and Health (NIOSH), 1600 Clifton Road, Atlanta, GA 30333
(phone: 1-800-232-4636, website: www.cdc.gov/NIOSH)

1-7 Commercial Warranty

Product is warranted to be free from defects in material and workmanship for the period specified below after the sale by an authorized Buyer.

TOUGH GUN™ Robotic MIG Guns and Components …... 1 year
TOUGH GUN™ Automatic MIG Gun..... 1 year
TOUGH GUN™ Reamer ……..…….. 1 year
TOUGH GUN™ Reamer when factory-equipped
with Lubricator …….....…. 2 years
TOUGH GUN™ Reamer when factory-equipped
with Lubricator and used only with Tregaskiss™
TOUGH GARD™ Anti-Spatter Liquid ……...……. 3 years
TOUGH GUN™ Robotic Peripherals
(Clutch, Sprayer, Wire Cutter, Mounting Arms) ……... 1 year
Low-Stress Robotic (LSR) Unicables ……. 2 years

Tregaskiss reserves the right to repair, replace, or refund the purchase price of non-conforming product. Product found not defective will be returned to the Buyer after notification by Customer Service.
Tregaskiss makes no other warranty of any kind, expressed or implied, including, but not limited to the warranties of merchantability or fitness for any purpose. Tregaskiss shall not be liable under any circumstances to Buyer, or to any person who shall purchase from Buyer, for damages of any kind, including, but not limited to any direct, indirect incidental or consequential damages or loss of production or loss of profits resulting from any cause whatsoever, including, but not limited to any delay, act, error or omission of Tregaskiss.

Genuine Tregaskiss™ parts must be used for safety and performance reasons or the warranty becomes invalid. Warranty shall not apply if accident, abuse, or misuse damages of a product, or if a product is modified in any way except by authorized Tregaskiss personnel.

SECTION 2 - SPECIFICATIONS

2-1 System Components

Robotic MIG Gun for GMAW Welding
Duty Cycle Rating:
100%: 350 amps with Mixed Gases

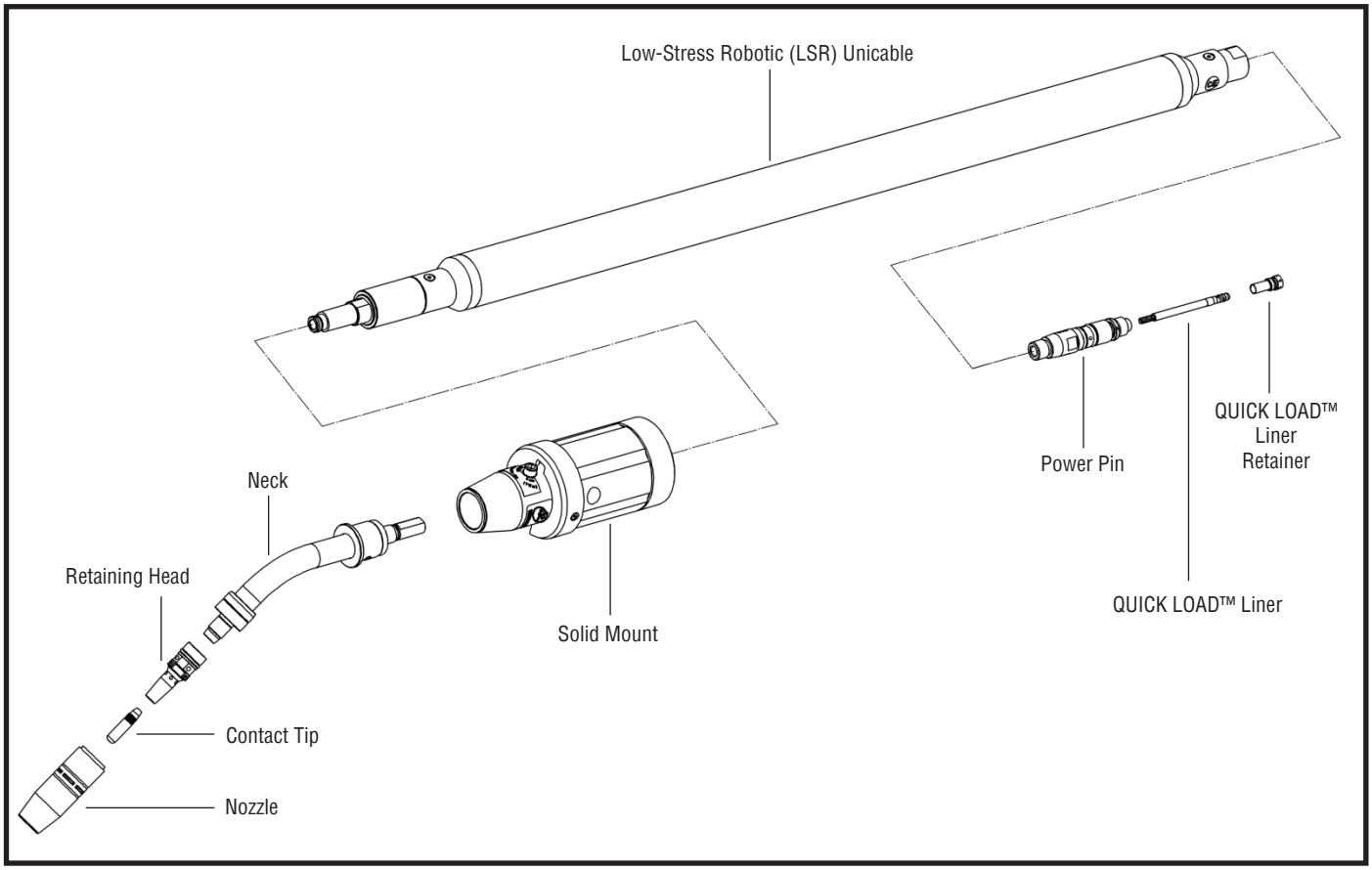

For complete parts list, please see **SECTION 6 – PARTS LIST**

3-1 Installing the Insulating Disc

NOTE: Position the robot with the wrist and top axis 180 degrees parallel to each other to properly complete the gun installation. Loosen feeder adjustment bolts so the feeder slides freely.

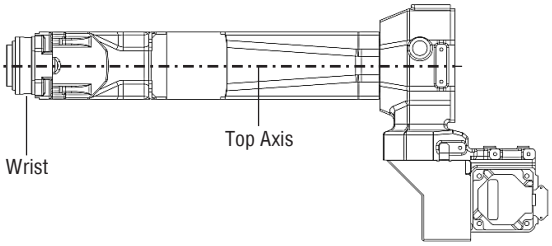

1. Begin by installing insulating disc, being sure to align dowel pin with associated hole on robot mounting face.
   NOTE: Dowel will be pressed into disc prior to shipping.

2. Fully seat insulating disc on robot wrist. **NOTE:** Do not use the fasteners to pull the face of the insulating disc to the face of the robot wrist, as damage will occur.

   IMPORTANT: Ensure space is uniform all the way around the robot wrist before proceeding (see *Figure 1*).

   Figure 1

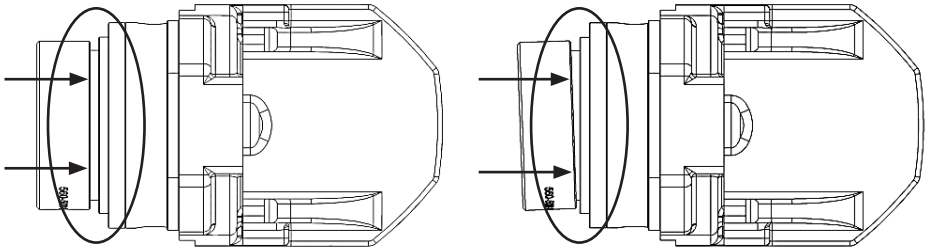

CORRECT! Spacing is uniform

STOP! Spacing is not uniform - **DO NOT PROCEED!**

3. Using the supplied tightening pattern in *Figure 2*, attach insulating disc using the provided M4x0.7x12 cap screws (x4). Torque to 25 in.-lbs. (2.8 Nm).
   IMPORTANT: Installing differently than as instructed can result in cracking or breaking of the insulating disc.

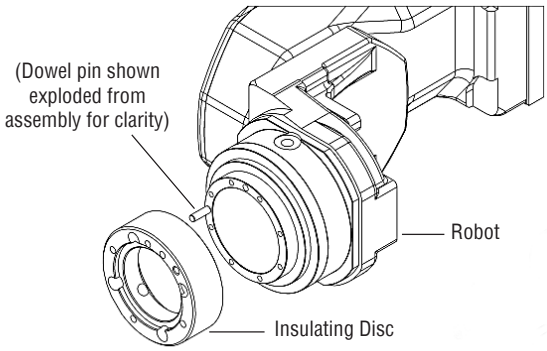

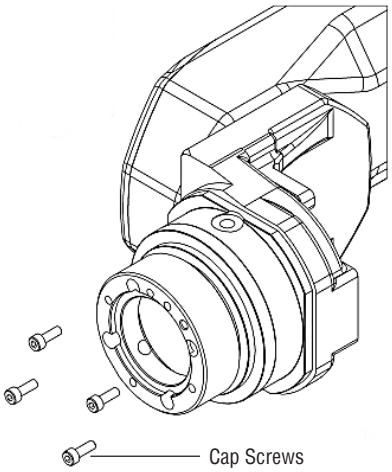

Figure 2

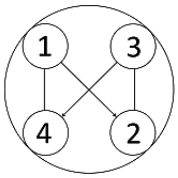

NOTE: When properly fastened, the head of the SHCS will not stick out past the face of the insulating disc.

3-2 Installing the Aluminum Spacer

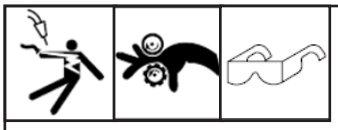

1. Install aluminum spacer, again aligning the dowel pin to dowel pin hole on the insulating disc.
   NOTE: Dowel will be pressed into aluminum prior to shipping.

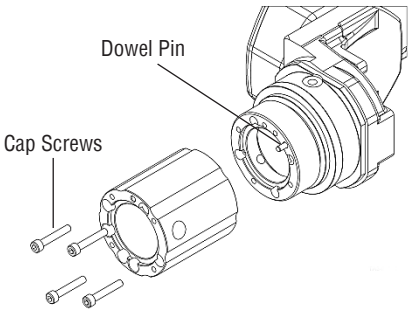

2. Using the supplied tightening pattern in *Figure 2* in **3-1 Installing the Insulating Disc**, install provided M5x0.8x25 cap screws (x4) and torque to 25 in.-lbs. (2.8 Nm). **Do not over-tighten**.

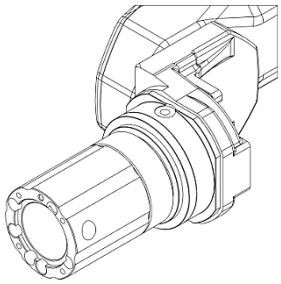

3-3 Installing the Power Pin to the LSR Unicable

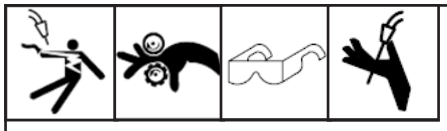

A. Standard Power Pins
NOTE: Power pins incorporate a taper to seat and lock the pin to the rear handle block. Make sure the power pin is tightened in the block with a wrench to ensure the pin is secure and will not come loose.

1. Thread power pin into the adaptor of the LSR Unicable.
2. Tighten the power pin into the rear block using a 1” (25 mm) wrench on the rear block and a 5/8” (16 mm) or 3/4” (19 mm) wrench on the power pin. Torque to 18 ft.-lbs.

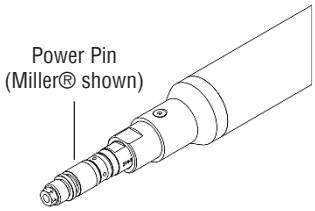

B. AutoLength™ Pins
NOTE: The AutoLength Pin is designed specifically for use with QUICK LOAD Liners. Do not attempt to use with any other type of liner.

3. Thread AutoLength Pin into the adaptor of the LSR Unicable.
4. Tighten the AutoLength Pin into the rear block using a 1” (25 mm) wrench on the rear block and a 5/8” (16 mm) or 3/4” (19 mm) wrench on the AutoLength Pin. Torque to 18 ft.-lbs.

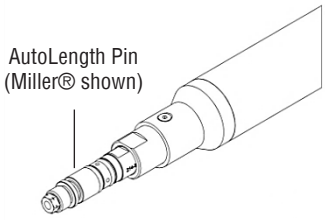

C. Euro Connections
NOTE: The Euro connection comes factory installed. No installation required.

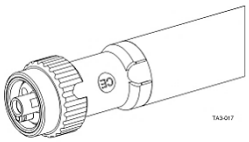

3-4 Installing the LSR Unicable

1. Feed the unicable through the wrist and arm of the robot and leave 6” of unicable hanging out the front of the wrist.

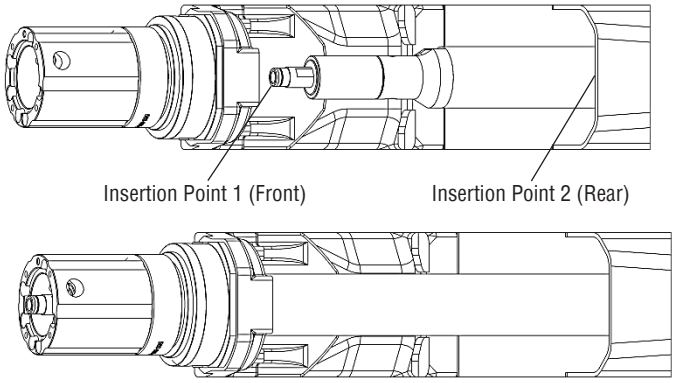

3-5 Installing the Front Housing

1. Firmly grasp the unicable at the location indicated.
2. Next, bring the connector housing toward the unicable and insert fully onto the pin at the end of the unicable.
3. Force the two components together until **contact surfaces 1** and **2** are touching firmly.

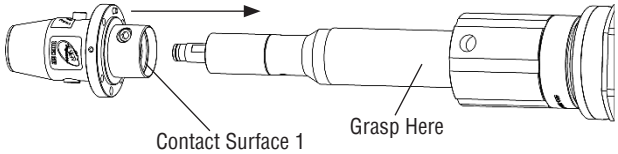

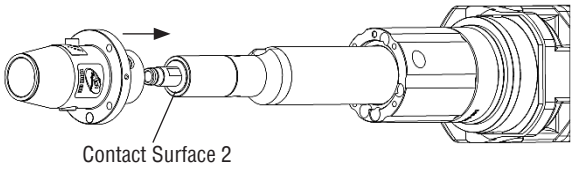

4. Fasten the connector housing to the LSR Unicable by tightening the front housing cap screw M6x1x12. Torque to 80 in.-lbs. (9 Nm).

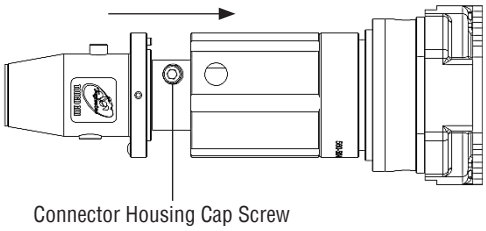

5. Fasten connector housing to the aluminum spacer using M5x0.8x16 cap screws (x4). Torque to 50 in.-lbs. (5.5 Nm).

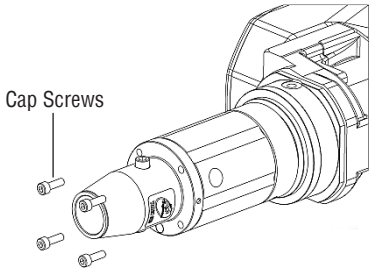

3-6 Installing the Fastener Cover

1. Slide the fastener cover up and into place and then attach using flat head cap screws (x2). Torque to 12 in.-lbs. (1.4 Nm).

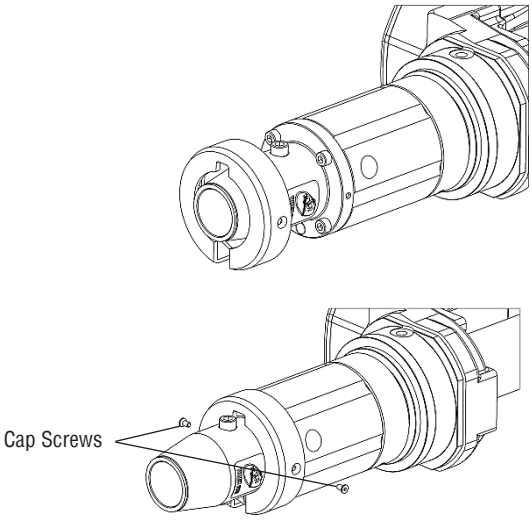

3-7 Installing the Neck

1. Align dowels on neck with keyway in connector housing and insert the neck into the connector housing until it is fully seated.

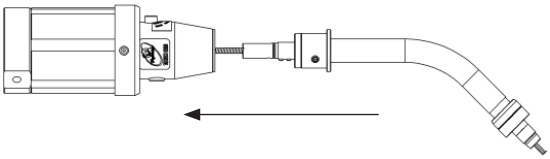

2. Tighten neck bolt clockwise with a 5 mm Allen wrench to torque specifications (60 in.-lbs. or 7 Nm).

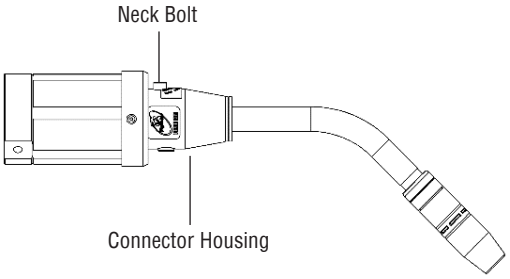

3-8 Installing the QUICK LOAD Liner

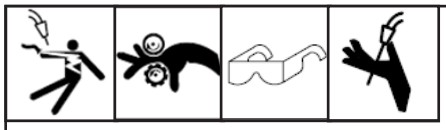

1. Insert brass end of the QUICK LOAD™ Liner into the Liner Retainer until firmly seated.
2. Insert non-brass end of the QUICK LOAD Liner into back of the gun and push through until it emerges from the front of the gun and the Liner Retainer makes contact with the power pin.
3. Thread the QUICK LOAD Liner Retainer (part #415-26) into the power pin. Torque to 30 in.-lbs. (3.5 Nm).
4. Push liner back into front of gun and hold in place.
5. Trim liner to a 3/4” (19 mm) stick out.
6. Remove any burrs that may obstruct wire feed.

NOTE: All future QUICK LOAD Liner installations will take place at the front of the gun (see **Section 4-3 Changing the Liner**).

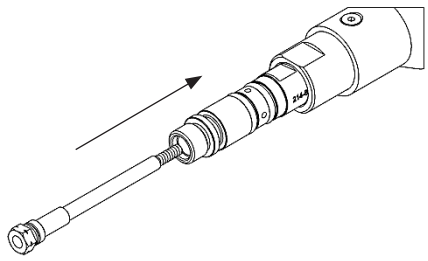

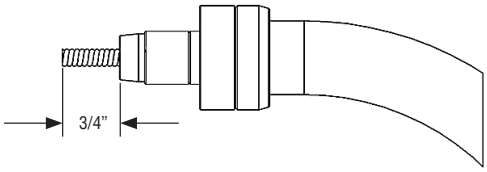

3-9 Installing the Gun LSR Unicable to the Feeder

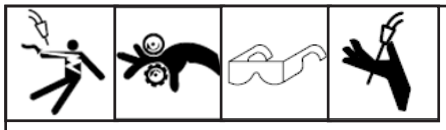

1. Ensure that the bolts clamping the feeder to the bracket on the robot are loosened.
2. Install power pin on the rear of the unicable into the feeder.
3. Slide the feeder towards the front of the robot. This will cause a necessary curve in the cable to allow for proper operation.
   REMINDER: The robot’s top axis must be at 180 degrees during installation.
4. Articulate J5 and allow cable to push / pull feeder into a neutral position.
   NOTE: *The feeder should be pressed forward far enough that the centerline of the unicable should bow up or down by no more than 1.5” and its highest point should not interfere with the robotic casting / through-arm cover.*
5. When J5 articulation has been verified, tighten feeder bracket bolts to manufacturers’ recommendations to ensure that feeder remains in the proper position.

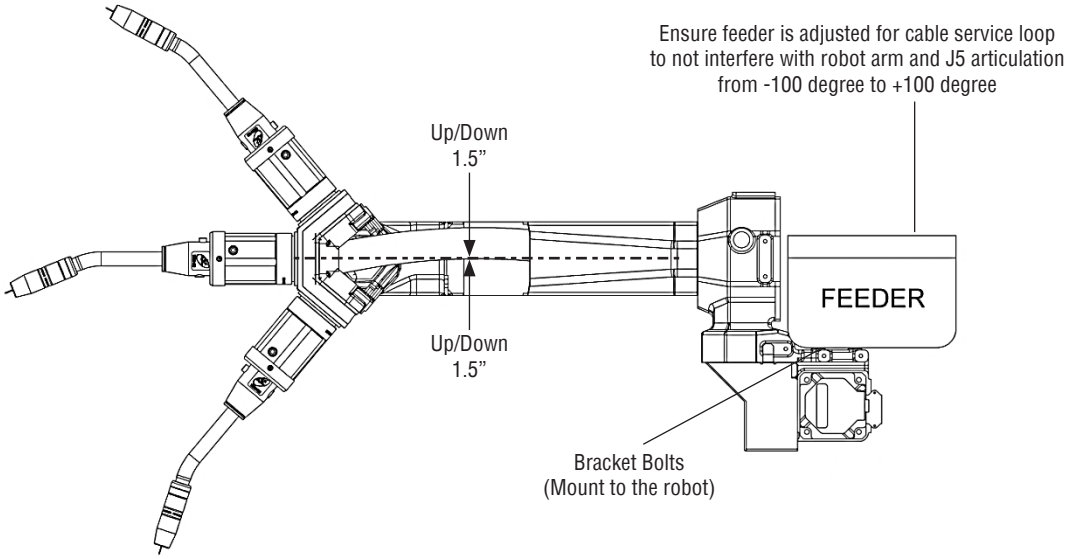

3-10 Connecting Wire Brake and/or Air Blast

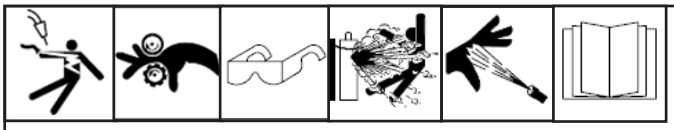

A. Wire Brake

1. Route wire brake air line to designated control valve in your facility (not provided).
2. 40-60 psi air supply required for proper operation.

B. Air Blast

1. Route air blast air line to designated control valve in your facility (not provided).
2. 80-100 psi air supply required for proper operation.

SECTION 4 - REPLACEMENT

4-1 Changing Consumables

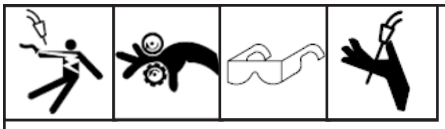

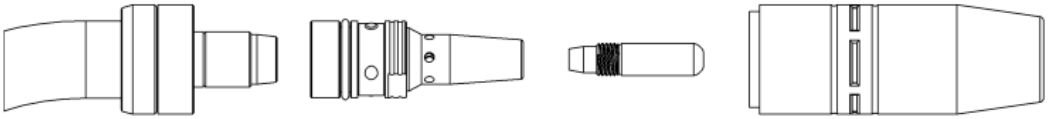

IMPORTANT NOTE:

- Be sure all consumables are tightened properly and fully seated before welding to prevent overheating.

Changing the Nozzle

1. Pull slip-on nozzles off with a twisting motion.
2. When installing the nozzle, ensure that it is fully seated.

Changing the Contact Tip

1. Thread the contact tip into the retaining head.
2. Torque to 30 in.-lbs. (3.5 Nm)

Changing the Retaining Head

1. Thread the retaining head onto neck with a 5/8” (16 mm) wrench.
2. Torque to 80 in.-lbs. (9 Nm).

4-2 Changing the Neck

1. Insert new neck into connector housing until neck is fully seated.
2. Tighten neck bolt clockwise with a 5 mm Allen wrench. Torque to 60 in.-lbs. (7 Nm).

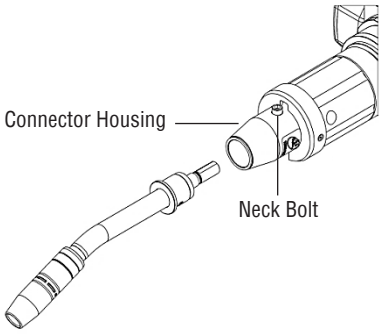

4-3 Changing the Liner

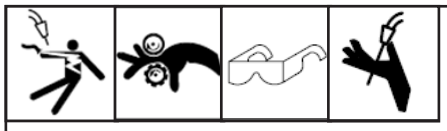

A. Changing the QUICK LOAD™ Liner
NOTE: Ensure power supply is off before proceeding.

1. Remove consumables (nozzle, contact tip and retaining head) (see **Section 4-1 Changing Consumables**).

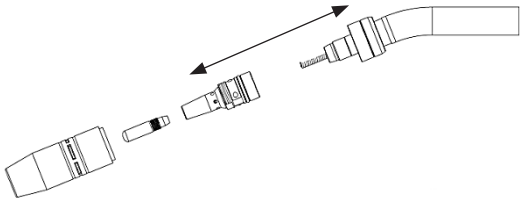

2. Remove existing QUICK LOAD Liner by pulling it out from the neck.
3. Insert the new QUICK LOAD Liner through the neck using the welding wire as a guide (short strokes will prevent kinking).

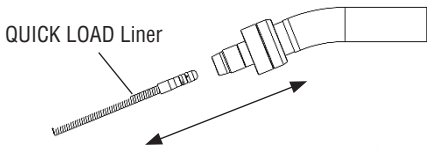

4. Once liner stops feeding, give it an extra push until it bottoms out in the liner retainer in the power pin to ensure it is inserted completely. **NOTE:** Be careful not to kink liner.
5. Push liner back into gun and hold in place. Using liner gauge, trim liner to a 3/4” stick-out.
   HELPFUL HINT: Before cutting liner, make a mark after the gauge and pull it back out past the end of the welding wire; then cut it and push the liner back into place securely. This will help with feeding the wire through the contact tip afterwards.
6. Remove any burr that may obstruct wire feed.
7. Reinstall consumables onto neck.

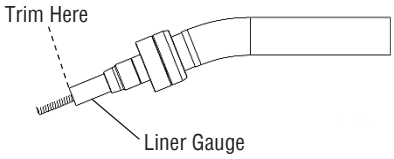

B. Changing the QUICK LOAD Liner in the AutoLength™ System
NOTE: Ensure power supply is off before proceeding.

1. Remove consumables (nozzle, contact tip and retaining head) (see **Section 4-1 Changing Consumables**).
2. Remove existing QUICK LOAD Liner by pulling it out from the neck.
3. Insert the new QUICK LOAD Liner through the neck using the welding wire as a guide (short strokes will prevent kinking).
4. Feed the liner into the gun until it engages with the retainer inside the AutoLength Pin. Place the liner gauge onto the end of the QUICK LOAD Liner and press flush with the end of the neck.
5. Push the QUICK LOAD Liner into the gun until the liner will not go forward any further. **NOTE:** Liner will be pushed in by approximately one additional inch.
6. Using the liner gauge, trim the liner with a 3/4” (19 mm) stick out. **NOTE:** After trimming, the liner will stick out of the neck by approximately 1 3/4”. This is normal, as the liner will be pushed back into the neck when the consumables are installed.
7. Feed wire through the MIG gun.
8. Reinstall consumables.

4-4 Changing the Euro Connection

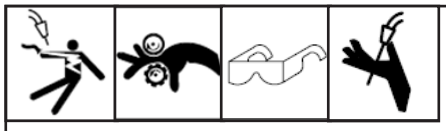

1. Remove M5x6 mm countersunk fasteners.
2. Slide the hand nut over the Euro power pin body.

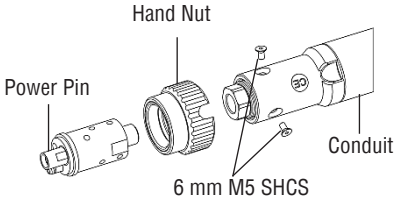

3. Torque the power pin body to the threaded end of the unicable at 18 ft.-lbs. (24 Nm) using 7/8” and 13/16” wrenches. You may have to pull back on the outer conduit to achieve this.
4. Once the power pin body is in place, pull the conduit down over it. Rotate the conduit so that the holes on the power pin line up with the holes on the plastic end of the conduit.
5. Reinstall fasteners.

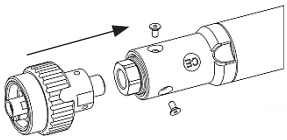

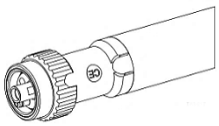

4-5 Changing TOUGH GUN I.C.E.™ Components

A. Changing the Water Lines

NOTE: Make sure water supply is turned off before changing water lines.

1. Remove the outer cover.
2. Pull the water lines through the flange cable connector and cover mounting ring.
3. Replace the outer cover.

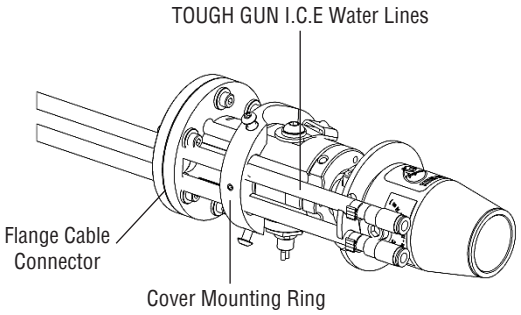

B. Installing the Neck

1. Align dowels on neck with keyway in connector housing and insert neck into the connector housing until it is fully seated.
2. Connect neck male coupler fitting to water line female coupler fitting.
3. Tighten neck bolt clockwise with a 5 mm Allen wrench to torque specifications (60 in.-lbs. or 7 Nm).

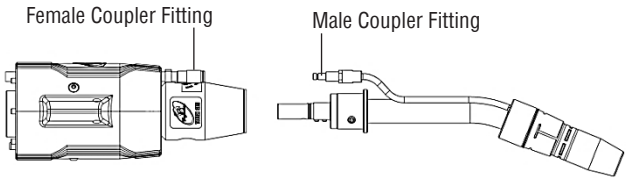

4-6 Replacing the Wire Brake

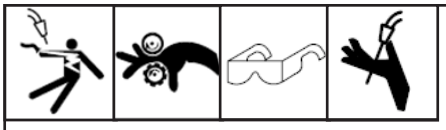

1. Remove power pin from feeder.
2. Trim and remove excess wire.
3. Remove front-end consumables and neck, including jump liner.
4. Shut off and disconnect 1/8” air supply at the wire brake pushing unit (see *Figure 1*).

5. Unthread and remove the wire brake pushing unit to allow the wire guide to be released (see *Figure 2*).
6. Carefully slide the wire guide using the wire guide tool out of the gun body (see *Figure 3*).

7. Inspect for wear and swap for proper wire size as required. **NOTE:** 0.035”-0.045” with one guide, 0.052”-1/16” with another.
8. Reinstall appropriate wire guide using the wire guide tool with the flats oriented (see *Figure 3*). Align the hole with pushing unit pin (see *Figure 2*).
9. Reinstall the wire brake pushing unit by threading it in until it stops, and then reconnect the air lines and turn on the air pressure.

Figure 1

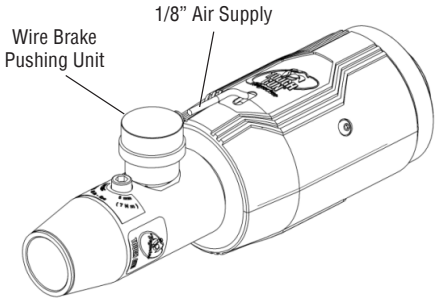

Figure 2

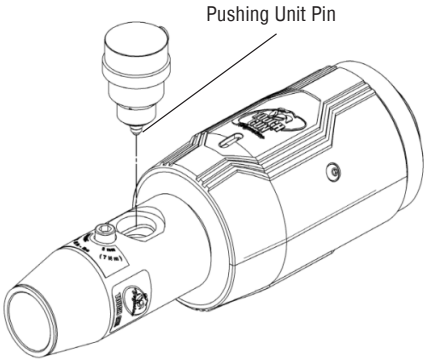

10. Reinstall power pin to feeder. Reinstall consumables and neck, including the jump liner.
11. Feed wire through the gun.
12. Disconnect drive rolls to allow wire to be pulled through the gun. Pull 6'-8' out of the gun. **NOTE:** The wire should pull through the gun easily. If the wire binds, double check the wire guide to ensure it's the proper size.
13. Activate wire brake via robot controller and attempt to pull additional wire out from gun. **NOTE:** The wire should no longer move.

Figure 3

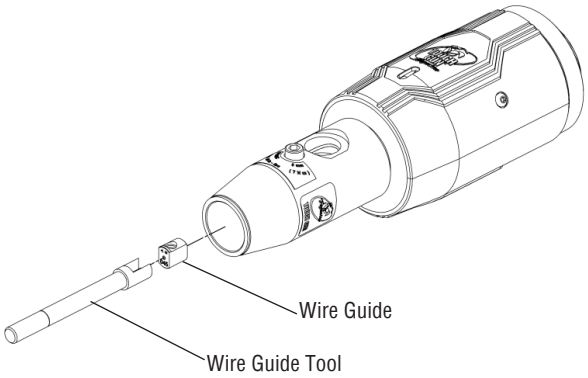

SECTION 5 - TECHNICAL DATA

5-1 Center of Mass - 22 Degree

*Wire Stick-Out = 15 mm

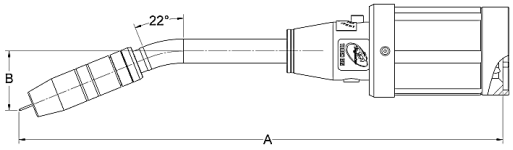

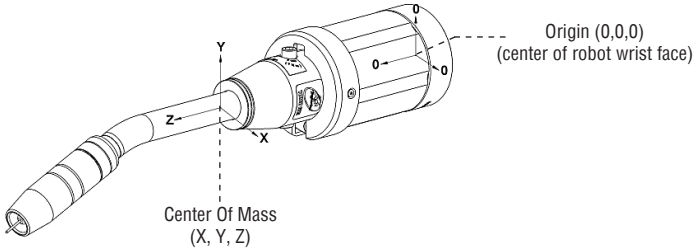

Solid Mount - 22 Degree

Neck	A	B	X	Y	Z	Weight
405-22QC	386.00 mm	47.00 mm	0.110 mm	-3.530 mm	137.720 mm	1.460 kg
405-22QCL	443.00 mm	47.00 mm	0.110 mm	-3.380 mm	153.620 mm	1.520 kg
405-22QCL1	499.00 mm	47.00 mm	0.110 mm	-3.240 mm	170.480 mm	1.590 kg

Solid Mount with Wire Brake - 22 Degree

Neck	A	B	X	Y	Z	Weight
405-22QC	421.00 mm	47.00 mm	0.100 mm	-1.700 mm	63.540 mm	1.790 kg
405-22QCL	479.00 mm	47.00 mm	0.100 mm	-1.630 mm	77.350 mm	1.850 kg
405-22QCL1	534.00 mm	47.00 mm	0.100 mm	-1.580 mm	92.200 mm	1.920 kg

5-2 Center of Mass - 45 Degree

*Wire Stick-Out = 15 mm

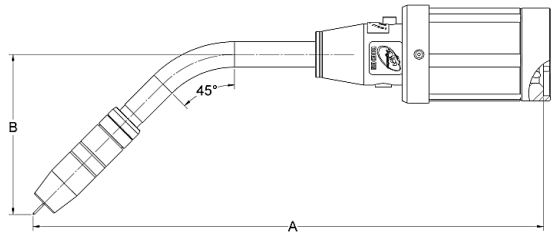

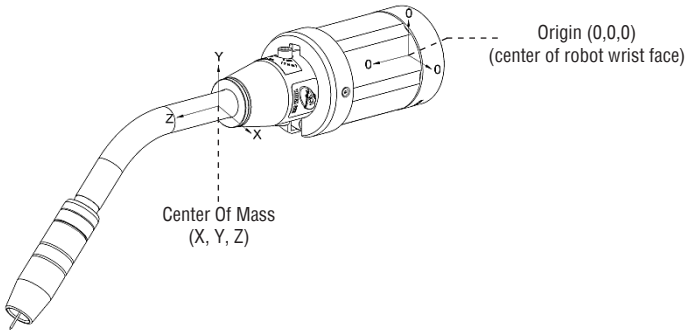

Solid Mount - 45 Degree

Neck	A	B	X	Y	Z	Weight
405-45QC	338.00 mm	100.00 mm	0.110 mm	-9.130 mm	129.430 mm	1.430 kg
405-45QCL	385.00 mm	120.00 mm	0.110 mm	-12.440 mm	143.630 mm	1.500 kg
405-45QCL1	440.00 mm	120.00 mm	0.100 mm	-11.910 mm	160.300 mm	1.560 kg
405-45QCL2	490.00 mm	120.00 mm	0.100 mm	-11.470 mm	176.14 mm	1.620 kg

Solid Mount with Wire Brake - 45 Degree

Neck	A	B	X	Y	Z	Weight
405-45QC	373.00 mm	100.00 mm	0.110 mm	-6.210 mm	56.340 mm	1.760 kg
405-45QCL	420.00 mm	120.00 mm	0.100 mm	-9.040 mm	68.810 mm	1.830 kg
405-45QCL1	475.00 mm	120.00 mm	0.100 mm	-8.720 mm	83.430 mm	1.890 kg
405-45QCL2	525.00 mm	120.00 mm	0.090 mm	-8.450 mm	97.410 mm	1.950 kg

6-1 Exploded View and Parts List

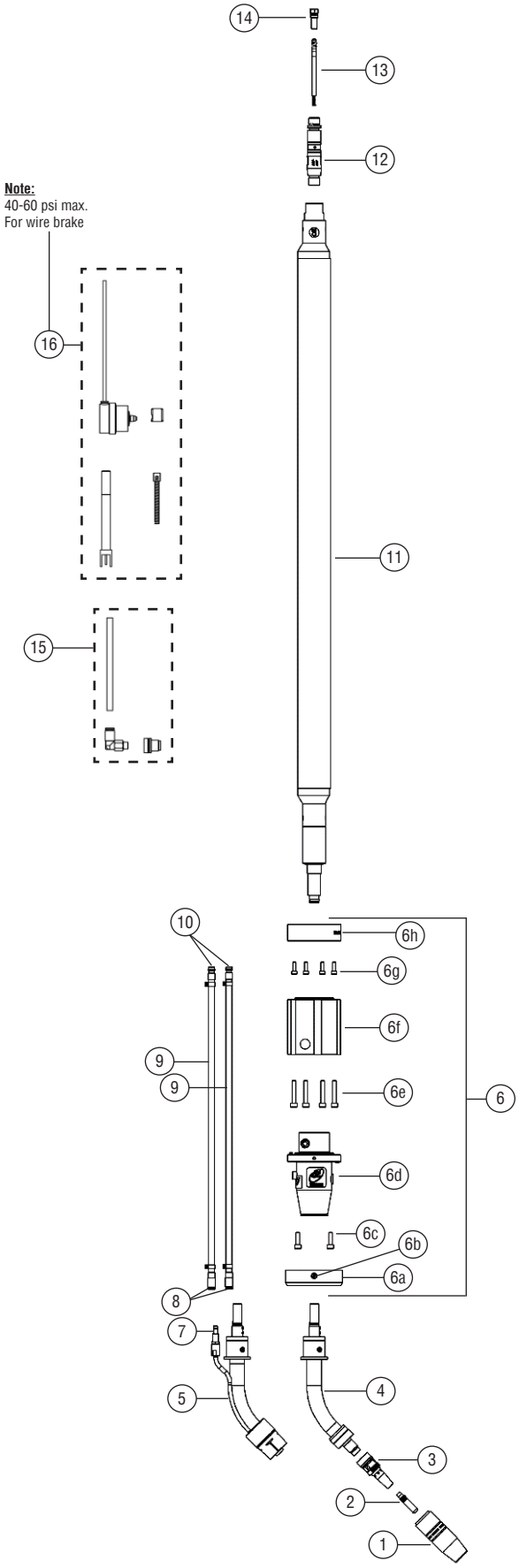

ITEM	PART #	DESCRIPTION
1	*See TOUGH GUN™ TA3 MIG Gun Spec Sheet*	Nozzle, Heavy Duty
		Nozzle, Standard Duty
		Nozzle, TOUGH ACCESS™
2	*See TOUGH GUN TA3 MIG Gun Spec Sheet*	Contact Tip, TOUGH LOCK™
3	*See TOUGH GUN TA3 MIG Gun Spec Sheet*	Retaining Head, TOUGH LOCK
		Retaining Head, TOUGH ACCESS
4	405-22QC	Neck, 22 degree, short length
	405-22QCL	Neck, 22 degree, medium length
	405-22QCL1	Neck, 22 degree, long length
	405-45QC	Neck, 45 degree, short length
	405-45QCL	Neck, 45 degree, medium length
	405-45QCL1	Neck, 45 degree, long length
	405-45QCL2	Neck, 45 degree, extended length
5	*See TOUGH GUN TA3 MIG Gun Spec Sheet*	Neck, TOUGH GUN I.C.E.™ assembly
6	560-500	Solid Mount Assembly Kit
6a	560-200-4	Fastener Cover (included in ITEM 6)
6b	*Not Sellable*	M3x0.5x6 LG. SCHCS (included in ITEM 6)
6c	*Not Sellable*	M5x0.8x16 LG. SHCS (included in ITEM 6)
6d	560-500-3	Connector Housing (included in ITEM 6)
	560-500-3A	Connector Housing (for guns equipped with air blast) (included in ITEM 6)
	W560-500-3	Connector Housing (for guns equipped with wire brake) (included in ITEM 6)
	W560-500-045A	Connector Housing (for guns equipped with air blast + wire brake; 0.045” wire) (included in ITEM 6)
	W560-500-116A	Connector Housing (for guns equipped with air blast + wire brake; 1/16” wire) (included in ITEM 6)
6e	*Not Sellable*	M5x0.8x25 LG. SHCS (included in ITEM 6)
6f	560-500-10	Front Spacer (included in ITEM 6)
6g	*Not Sellable*	M4x0.7x12 LG. SHCS (included in ITEM 6)
6h	560-500-11	Insulating Disc (included in ITEM 6)
7	590-8	Water Line Fittings, Male
8	658-8	Water Line Fittings, Female (x2) + clamps (x2) (Included in ITEM 9)
9	560-501-2	TOUGH GUN I.C.E. Water Lines (includes ITEMS 8 and 10)
10	658-2	Quick Connect Brass Fittings, Male (2) + clamps (x2) (included in ITEM 9)
11	*See TOUGH GUN TA3 MIG Gun Spec Sheet*	LSR Unicable
12	*See TOUGH GUN TA3 MIG Gun Spec Sheet*	Power Pin
13	*See TOUGH GUN TA3 MIG Gun Spec Sheet*	QUICK LOAD™ Liner
14	415-26	QUICK LOAD Liner Retainer
15	560-500FA	Air Blast Kit option
16	WB-045^	Wire Brake Kit option for 0.045” wire
	WB-116^	Wire Brake Kit option for 1/16” wire

**XX = wire size*
If gun is equipped with air blast, add suffix ‘A’ to part number; if gun is equipped with wire brake, add suffix ‘W’ to part number; if gun is equipped with air blast AND wire brake, add suffix ‘AW’ to part number; i**f gun is equipped with TOUGH GUN I.C.E. ™ Technology, please contact Customer Service for unicable part number
*^Appropriate connector housing (see **6d** above) required if retrofitting wire brake*

SECTION 7 - TROUBLESHOOTING

7-1 Troubleshooting Table

PROBLEM	POSSIBLE CAUSE	CORRECTIVE ACTION
1. Electrode does not feed.	1. Feeder relay. 2. Broken control lead. 3. Poor adaptor connection. 4. Worn or broken switch. 5. Improper drive roll size. 6. Drive roll tension misadjusted. 7. Burn back to contact tip. 8. Wrong size liner. 9. Buildup inside of liner.	1. Consult feeder manufacturer. 2. a. Test and connect spare control lead. b. Install new cable. 3. Test and replace leads and/or contact pins. 4. Replace. 5. Replace with proper size. 6. Adjust tension at feeder. 7. See 'Contact tip burn back'. 8. Replace with correct size. 9. Replace liner, check condition of electrode.
2. Contact tip burn back.	1. Improper voltage and/or wire feed speed. 2. Erratic wire feeding. 3. Improper tip stickout. 4. Improper electrode stickout. 5. Faulty ground.	1. Adjust parameters. 2. See 'Erratic wire feeding'. 3. Adjust nozzle / tip relationship. 4. Adjust gun to base metal relationship. 5. Replace cables and/or connections.
3. Tip disengages from the gas diffuser.	1. Worn gas diffuser/retaining head. 2. Improper tip installation. 3. Extreme heat or duty cycle.	1. Replace tip and/or gas diffuser / retaining head. 2. Install as per '**4-1 Changing Consumables**'. 3. Replace with heavy duty consumables. See appropriate Spec Sheet for details.
4. Short contact tip life.	1. Contact tip size. 2. Electrode eroding contact tip. 3. Exceeding duty cycle.	1. Replace with proper size. 2. Inspect and/or change drive rolls. 3. Replace with properly rated Tregaskiss MIG Gun.
5. Erratic arc.	1. Worn contact tip. 2. Buildup inside of liner. 3. Wrong tip size. 4. Not enough bend in neck.	1. Replace. 2. Replace liner, check condition of electrode. 3. Replace with correct tip size. 4. Replace with 45° or 60° neck.
6. Erratic wire feeding.	1. Buildup inside of liner. 2. Wrong size liner. 3. Improper drive roll size. 4. Worn drive roll. 5. Improper guide tube relationship. 6. Improper wire guide diameter. 7. Gaps at liner junctions. 8. Feeder malfunction. 9. Contact tip.	1. Replace liner, check condition of electrode. 2. Replace with new liner of proper size. 3. Replace with proper size drive roll. 4. a. Replace with new drive roll. b. Stone edge of groove on drive roll. 5. a. Adjust / replace guide as close to drive rolls as possible. b. Eliminate all gaps in electrode path. 6. Replace with proper guide diameter. 7. a. Replace with new liner, trimming as per '**4-4 Changing the Liner**'. b. Replace guide tube / liner, trim as close to mating component as possible. 8. Consult feeder manufacturer. 9. Inspect and replace.*

PROBLEM	POSSIBLE CAUSE	CORRECTIVE ACTION
7. Extreme spatter.	1. Improper machine parameters. 2. Improper tip installation. 3. Improper shielding. 4. Contaminated wire or workpiece.	1. Adjust parameters. 2. Adjust nozzle / tip relationship. 3. a. Verify shielding gas coverage. b. Verify gas mixture. 4. Clean wire and workpiece.
8. Porosity in weld.	1. Insulator worn. 2. Gas diffuser damaged. 3. Extreme heat or duty cycle. 4. Solenoid faulty. 5. No gas. 5. Flow improperly set. 6. Gas ports plugged. 6. Ruptured gas hose. 7. Control circuit loss. 8. Worn, cut or missing o-rings. 9. Loose fittings.	1. Replace nozzle / insulator. 2. Replace gas diffuser. 3. Replace with heavy duty consumables. 4. Replace solenoid. 5. a. Install full tanks. b. Check supply. c. Check for hose leaks. 6. Adjust. 7. a. Clean or replace gas diffuser. b. Clean nozzle. 8. Repair or replace cable or line. 9. See 'Electrode does not fit'. 10. Replace o-rings. 11. Tighten gun and cable connections to specified torque. See '**SECTION 4 – REPLACEMENT**'.
9. Gun running hot.	1. Exceeding duty cycle. 2. Loose or poor power connection.	1. a. Replace with properly rated Tregaskiss MIG Gun. b. Decrease parameters to within gun rating. 2. a. Clean, tighten or replace cable grounding connection. b. Tighten gun and cable connections to specified torque. See '**SECTION 4 – REPLACEMENT**'.
10. Liner is discolored.	1. Short circuit to electrode. 2. Broken copper stranding in power cable.	1. Isolate electrode reel from feeder and drive block. Consult feeder manufacturer's manual. 2. Replace unicable.
11. Sporadic feeding of aluminum electrode.	1. Tip galling. 2. Synthetic liner melting. 3. Wire deformed by feeder rolls.	1. Inspect and replace contact tip.* 2. a. Replace liner. b. Replace with composite liner. c. Replace the neck and jump liner. 3. Adjust drive rolls as per feeder manufacturer's manual.

**In some cases with aluminum and mild steels, it may be necessary to use a contact tip with either a larger or smaller bore size.*

NOTES

For additional support materials such as Spec Sheets, troubleshooting information, how-to guides and videos, animations, online configurators and much more, please visit Tregaskiss.com. Scan the QR Code with your smart phone for immediate access to Tregaskiss.com/TechnicalSupport.

Scan to view the TOUGH GUN™ TA3 MIG Gun Owner's Manual.....

Scan to view the TOUGH GUN™ TA3 MIG Gun Spec Sheet.....

Scan to view the TOUGH LOCK™ Consumables.....

Scan to view the QUICK LOAD™ Liners.....

Scan to view Tregaskiss Spec Sheets.....

Tregaskiss
2570 North Talbot Road
Windsor, Ontario N0R 1L0
Canada

Phone: 1-855-MIGWELD (644-9353) (US & Canada)
+1-519-737-3000 (International)
Fax: 519-737-1530
For more information, visit us at Tregaskiss.com